02 2420 ... T18CB100

Panel Mount Connectors Quicklock

Quicklock chassis socket, IP67, size 16, straight version, with plastic housing, solder terminals and protecting cap (IP65)

Approvals:

02 2420 ... T18CB100

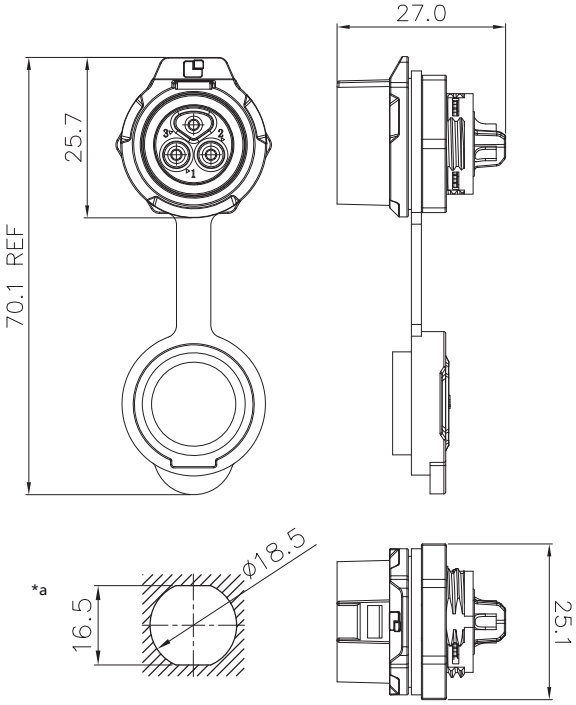

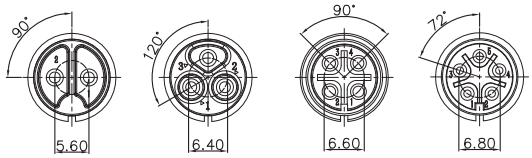

2420 02 T18CB100 | 2420 03 T18CB100 | 2420 04 T18CB100 | 2420 05 T18CB100

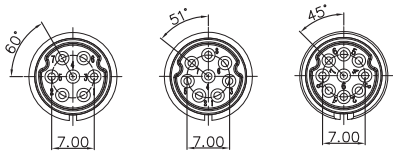

2420 07 T18CB100 | 2420 08 T18CB100 | 2420 09 T18CB100

*a port
maximum wall thickness 4.5 mm

Environmental conditions

Temperature range	-40 °C/+80 °C

Materials

Insulating body	PBT, V-0 according to UL94
Contact bush	CuSn, gold-plated
Housing	PBT, V-0 according to UL94 [1]
Cap	SI
Hexagonal nut	PBT, V-0 according to UL94

[1] outdoor sustainable (F1 according to UL 746C)

Mechanical data

Mating cycles	1700
Insertion force	≤ 90 N
Withdrawal force	≤ 40 N
Protection class	IP67 (protecting cap IP65) [1]

[1] only in locked condition with an appropriate counterpart

Connectable conductors for solder area

Section	0.8–1.3 mm²/AWG 18–16 (2–4 poles) 0.34–0.5 mm²/AWG 22–20 (5–9 poles)

Electrical data (at T_{amb} 20 °C)

Contact resistance	≤ 2.5 mΩ (2–4 poles) ≤ 5.0 mΩ (5–9 poles)
Rated current	10 A (2–4 poles) 5 A (5–9 poles)
Rated voltage	400 V (2–4 poles) 250 V (5–9 poles)
Rated impulse voltage	2500 V AC (2–4 poles) 1500 V AC (5–9 poles)
Creepage distance	≥ 2 mm
Clearance	≥ 2 mm
Insulation resistance	> 500 MΩ

Associated products

Counterparts
2450 ... T09CB T

02 2420 ... T18CB100

Designation	Pole Number	PU (Pieces)	MDQ (Pieces)
2420 02 T18CB100	2	10	50
2420 03 T18CB100	3	10	50
2420 04 T18CB100	4	10	50
2420 05 T18CB100	5	10	50
2420 07 T18CB100	7	10	50
2420 08 T18CB100	8	10	50
2420 09 T18CB100	9	10	50

Packaging:
in individual plastic bags, in a cardboard box